ASADA Paso Ancho 2026-03 Meeting

Laboratorio Delta

Mission Concept Review

ASADA Paso Ancho

Mission Concept Review

Contents

- Textual Requirements
- Operational Need Analysis

Goals

- Approve Textual Requirements
- Approve Operational Need Analysis

Textual Requirements, Needs, and Desires

Code	Requirement, Need, or Desire
RND1	Employees must monitor water tanks via a mobile-accessible dashboard
RND2	Employees must be alerted of high overflow or undersupply risk
RND3	System must obtain data from the Octave ultrasonic meter and the 24 V One-Wire depth sensor
P1	System must remain operational without on-site power or internet
M1	System must be contained in a cabinet that withstands environmental conditions
M2	System should operate for $\geq$48 h under direct rain or sunlight
CS1	System must be cybersecurity-hardened following applicable standards

Operational Need Analysis: Organizational Architecture

Activities, functional exchanges, and actors at the operational level

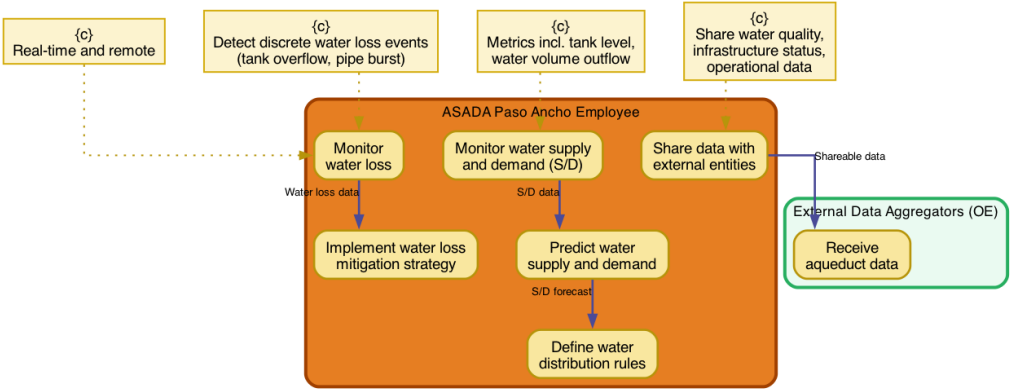

System Requirements Review

ASADA Paso Ancho

System Requirements Review

Contents

- Viewpoints
- System Need Analysis

Goals

- Approve Viewpoints
- Refine System Need Analysis

Viewpoints

- Security
- Privacy
- Availability
- Mobile Accessibility
- Maintainability
- Operation in a Remote Area

System Need Analysis: System Architecture

Functions, actors, and functional exchanges at the system level

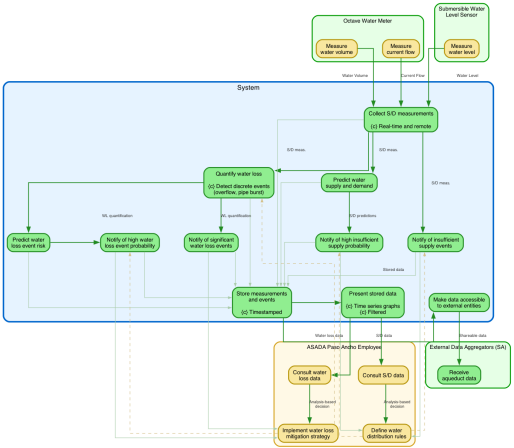

System Need Analysis: Functional Chains

FC: Provide Supply & Demand Data

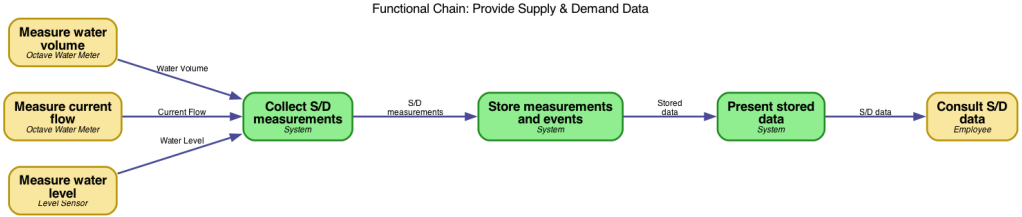

System Need Analysis: Functional Chains

FC: Provide Water Loss Data

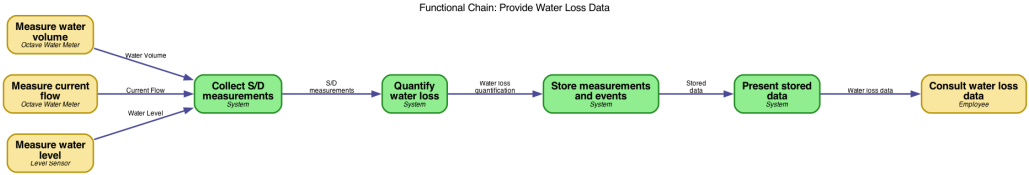

System Need Analysis: Functional Chains

FC: Alert Insufficient Supply

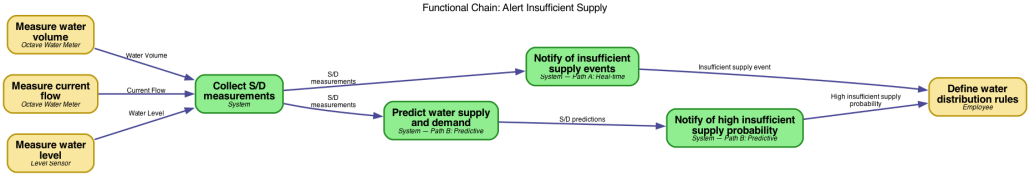

System Need Analysis: Functional Chains

FC: Alert Water Loss

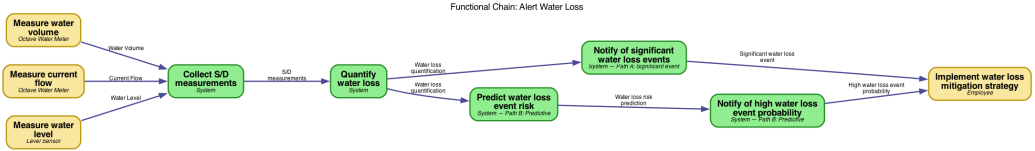

System Need Analysis: Functional Chains

FC: Configure Alerts

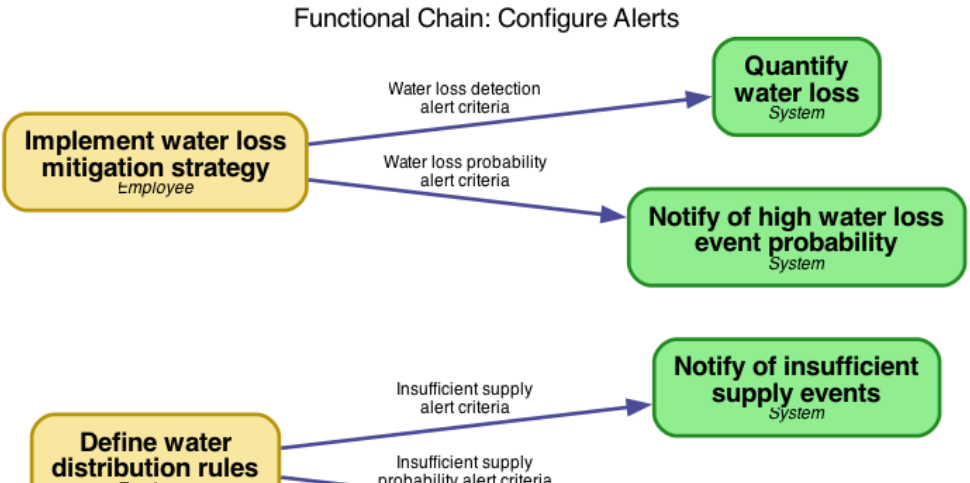

System Need Analysis: Functional Chains

FC: Share Data with External Entities

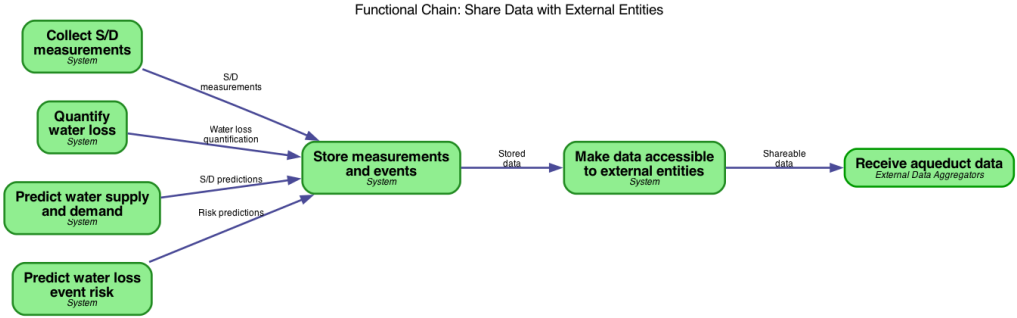

Mission Definition Review

ASADA Paso Ancho

Mission Definition Review

Contents

- System Need Analysis

Goals

- Determine Mission Feasibility

System Definition Review

ASADA Paso Ancho

System Definition Review

Contents

- System Need Analysis

Goals

- Approve System Need Analysis

Preliminary Design Review

ASADA Paso Ancho

Preliminary Design Review

Contents

- Logical Architecture

Goals

- Approve Logical Architecture

Logical Architecture: Components and Functions

Logical components, functions, and functional exchanges

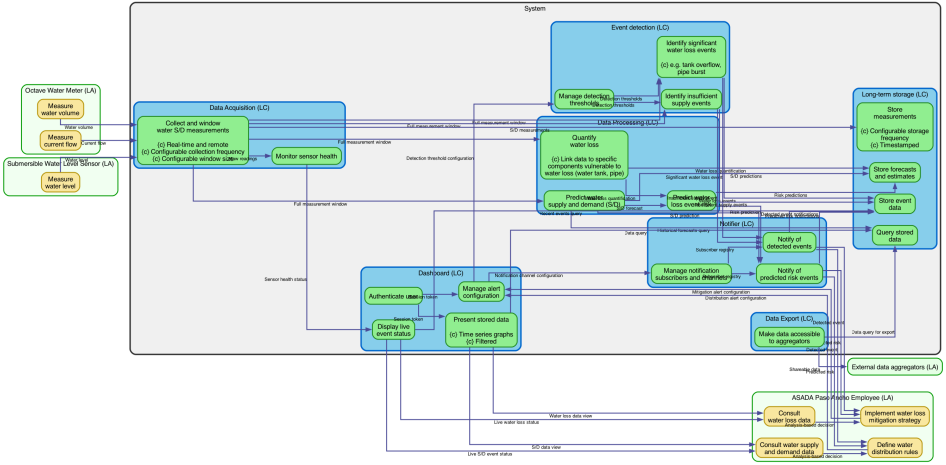

Logical Architecture: Component Exchanges

Communication patterns between logical components

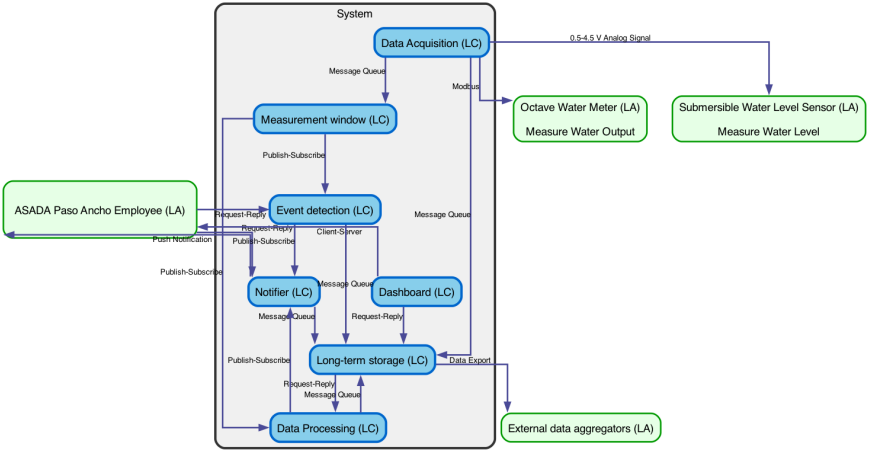

Critical Design Review

ASADA Paso Ancho

Critical Design Review

Contents

- Physical Architecture

Goals

- Approve Physical Architecture

Physical Architecture: Field Node

Solar-powered sensor node with cellular uplink

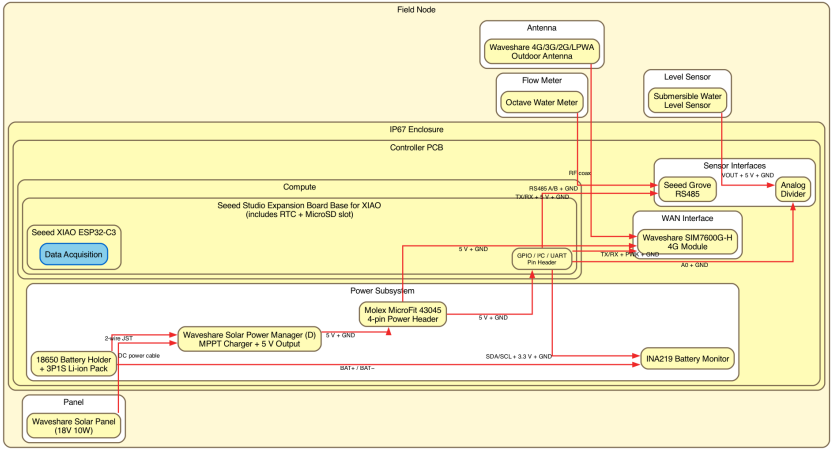

Physical Architecture: Server Node

Portable containerized deployment host

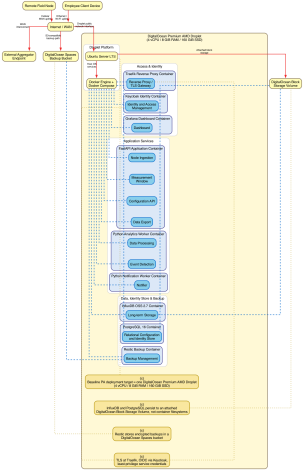
Remote Field Nodes
Employee Client Devices
Internet (HTTPS/443)
Internet (HTTPS/443)
Internet (HTTPS/443)

Physical Architecture: Scenario
Authenticate User

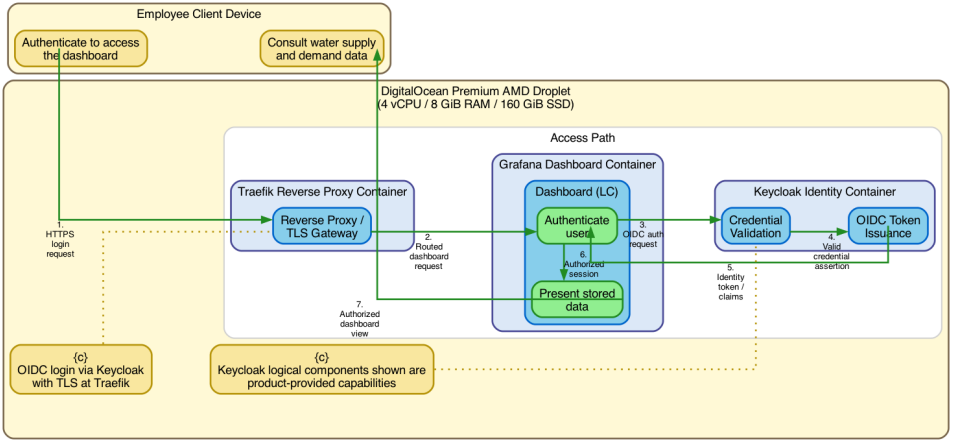

Physical Architecture: Scenario

Ingest and Validate Node Data

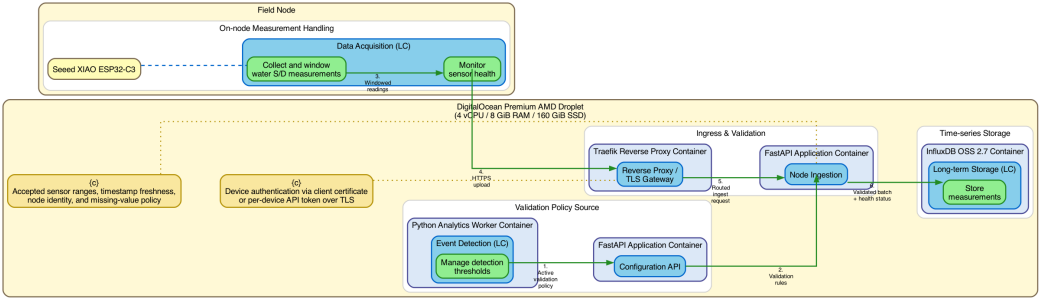

Physical Architecture: Scenario

Backup Time-Series Database

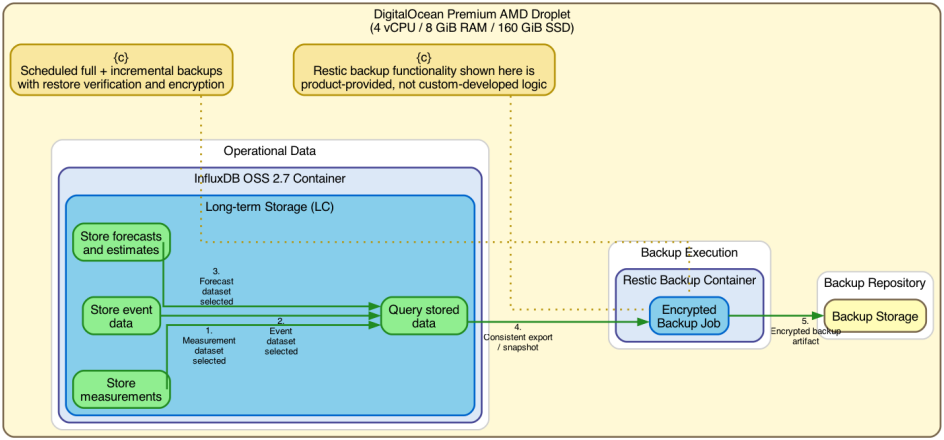

Production Readiness Review

ASADA Paso Ancho

Production Readiness Review

Contents

- Deadline
- Bill of Materials
- Team Members

Goals

- Determine Production Readiness

Bill of Materials (Field Node)

Component	Part
Microcontroller	Seeed XIAO ESP32-C3
Expansion board	Seeed Studio Expansion Base for XIAO (RTC + MicroSD)
RS-485 interface	Seeed Grove RS485
LTE modem	Waveshare SIM7600G-H 4G Module
Cellular antenna	Waveshare 4G/3G/2G/LPWA Outdoor Antenna
Solar panel	Waveshare Solar Panel 18 V 10 W
Power manager	Waveshare Solar Power Manager (D) — MPPT + 5 V output
Battery	18650 3P1S Li-ion Pack + Holder
Battery monitor	INA219
Level sensor	Submersible Water Level Sensor (0.5–4.5 V)
Flow meter	Octave Water Meter (existing, RS-485 Modbus)

Power Subsystem Components

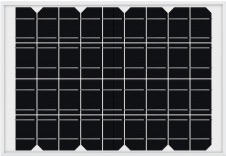

Solar Panel 18 V 10 W

Waveshare

$11.99

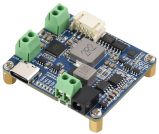

Solar Power Manager (D)

Waveshare

$12.99

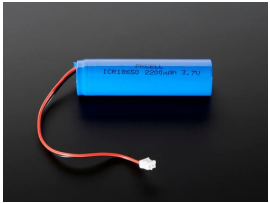

18650 Li-ion Cell ×3

3.7 V 2200 mAh, 3P1S pack

$9.95 × 3

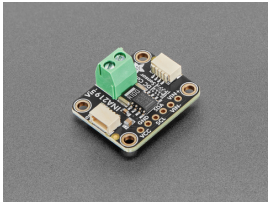

INA219 Battery Monitor

Adafruit breakout

$9.95

Subtotal (power subsystem): **$64.78** — Sources: Waveshare, Adafruit

Server Runtime Services

Traefik
- Edge TLS termination
- Single controlled ingress path

Keycloak
- OIDC SSO and token issuance
- Password handling isolated from app containers

Grafana
- Keycloak-backed SSO
- RBAC can restrict threshold editing

FastAPI
- Auditable ingestion/config/export API
- Token, node-identity, and input validation

InfluxDB OSS 2.7
- Bucket and token separation
- Write-only node tokens; read-only export tokens

PostgreSQL 16
- Central config and identity store
- Kept off the public internet

Additional custom containers: Python analytics worker, notification worker, and Restic backup job.

System Integration Review

ASADA Paso Ancho

System Integration Review

Contents

- Functional Versions
- IVV Plan

Goals

- Approve Functional Versions
- Approve IVV Plan

2026-03 Meeting Review

Covered

- Pre-Phase A: Concept Studies
- Phase A: Concept and Technology Development
- Phase B: Preliminary Design and Technology Completion
- Phase C: Final Design and Fabrication

Next Steps

- Phase D: System Assembly, Integration and Test, Launch
- Phase E: Operations and Sustainment
- Phase F: Closeout